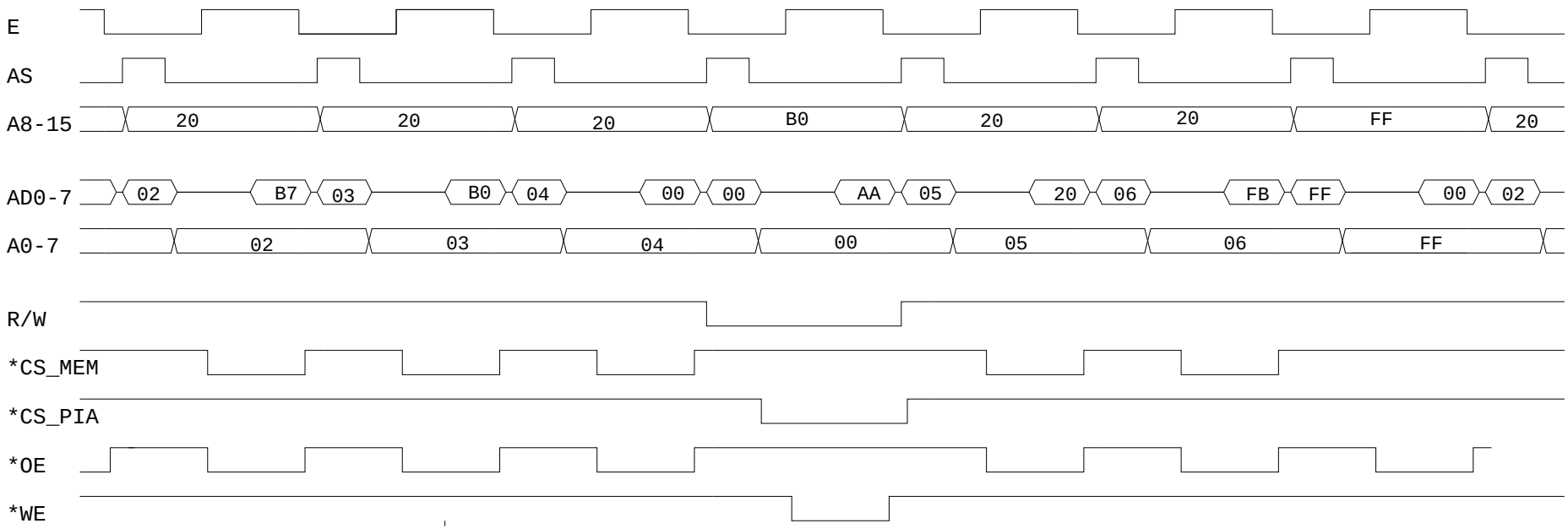


```
        .org 0x2000
        ldaa  #0xaa
loop:   staa  0xb000
        bra   loop
```

2002	B7
2003	B0
2004	00
2005	20
2006	FB